EXAMPLE OF TYPICAL SIGNAL CONNECTIONS
SERVO / ENCODER

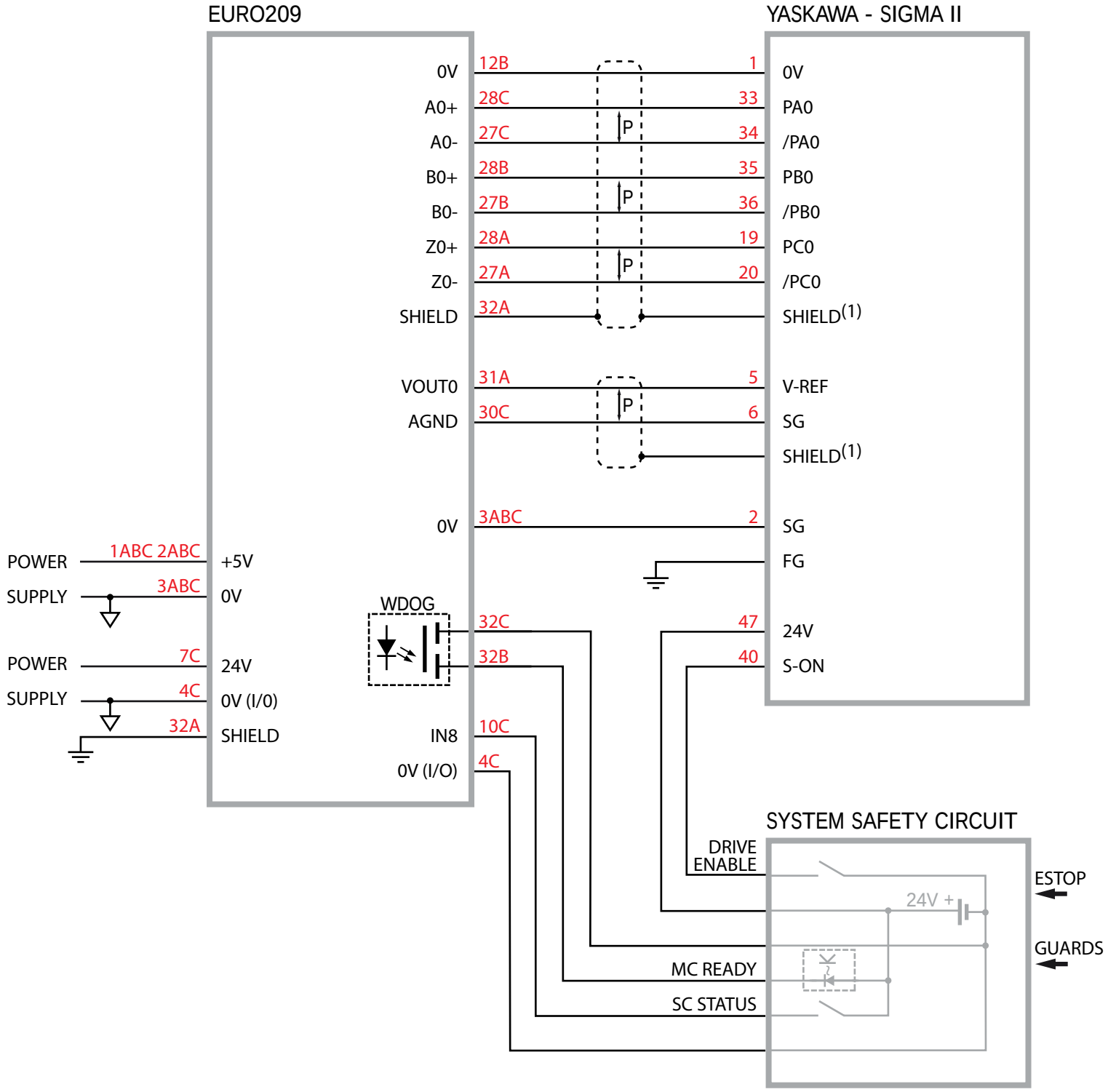

Axis 0 connections shown as example. See manual for Axes 1, 2 and 3 pin numbers.
(1) Connect shield wire securely to the plate inside the connector.

SCRENED CABLE | P TWISTED WIRE PAIRS | CLEAN EARTH | SAFETY EARTH

TRIO MOTION TECHNOLOGY